**NOTE: EQUIPMENT AVAILABLILITY MUST BE VERIFIED BEFORE THE START OF THE JOB.**

**NOTE:**
**ALL WEIGHTS AND DIMENSIONS ARE BASED ON AVAILABLE DATA AND SUBJECT TO CHANGE.**

| "A" DIMENSIONS | | |
|---|---|---|
| TAP MACHINE | LENGTH | WEIGHT |
| 18" T-101 | 47" | 50 LBS |
| 28" T-101 | 57" | 60 LBS |

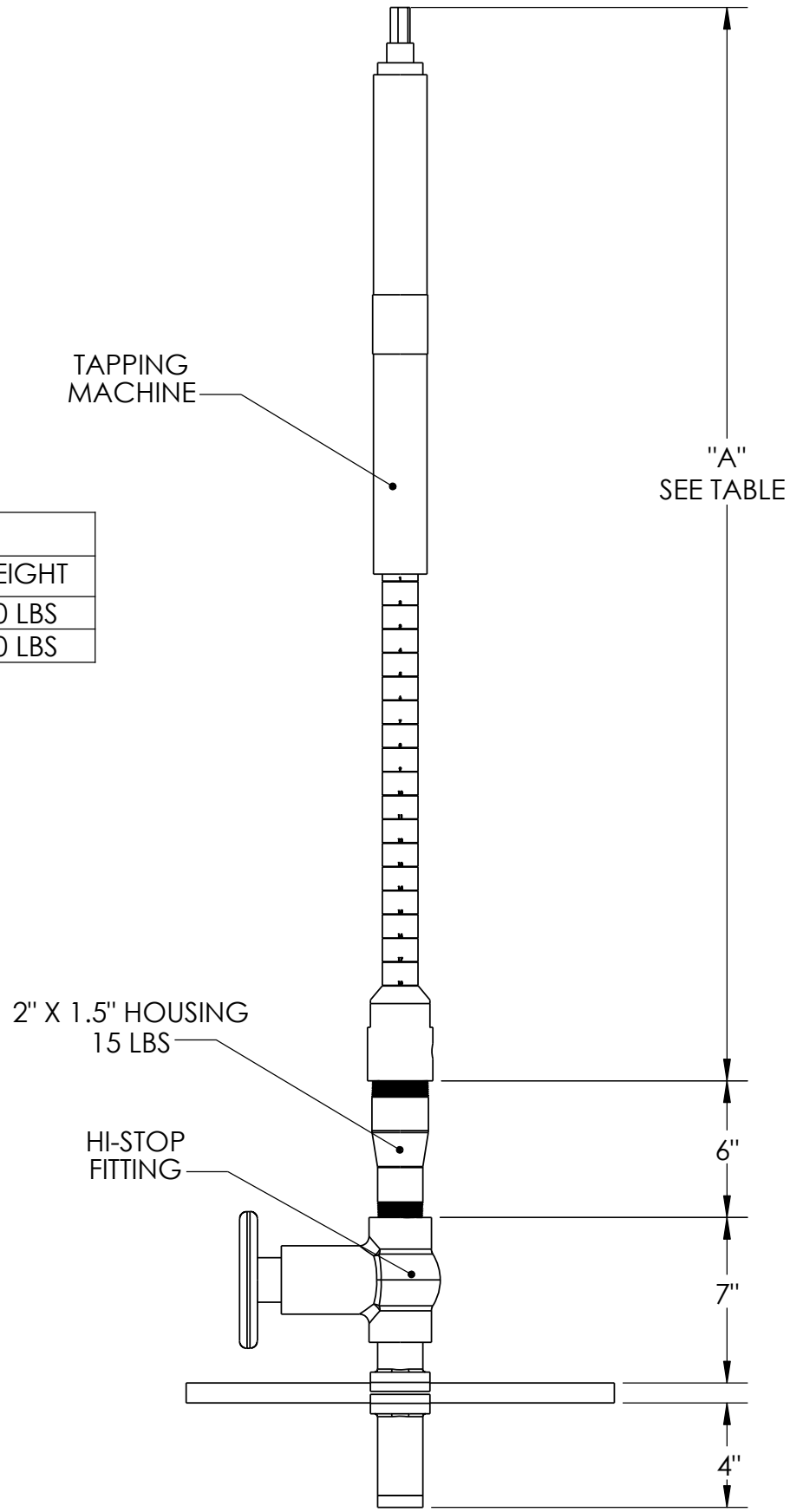


# .500" 600# HI-STOP®

SAFETY FIRST - QUALITY ALWAYS

**NOTE: EQUIPMENT AVAILABLILITY MUST BE VERIFIED BEFORE THE START OF THE JOB.**

**NOTE:**
**ALL WEIGHTS AND DIMENSIONS ARE BASED ON AVAILABLE DATA AND SUBJECT TO CHANGE.**

| "A" DIMENSIONS | | |
|---|---|---|
| TAP MACHINE | LENGTH | WEIGHT |
| 18" T-101 | 47" | 50 LBS |
| 28" T-101 | 57" | 60 LBS |

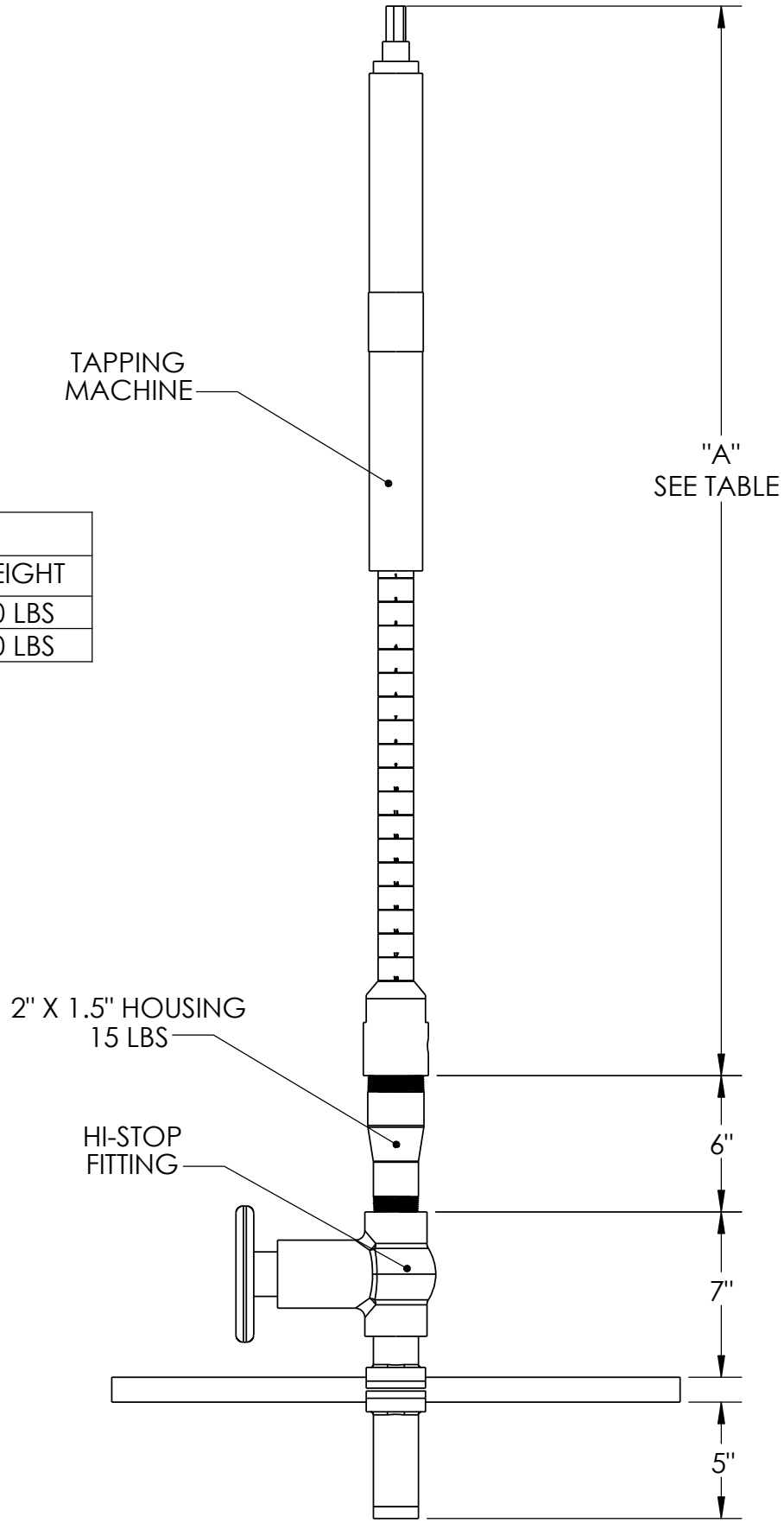


# .750" 600# HI-STOP®

SAFETY FIRST - QUALITY ALWAYS

**NOTE: EQUIPMENT AVAILABLILITY MUST BE VERIFIED BEFORE THE START OF THE JOB.**

**NOTE:**
**ALL WEIGHTS AND DIMENSIONS ARE BASED ON AVAILABLE DATA AND SUBJECT TO CHANGE.**

| "A" DIMENSIONS | | |
|---|---|---|
| TAP MACHINE | LENGTH | WEIGHT |
| 18" T-101 | 47" | 50 LBS |
| 28" T-101 | 57" | 60 LBS |

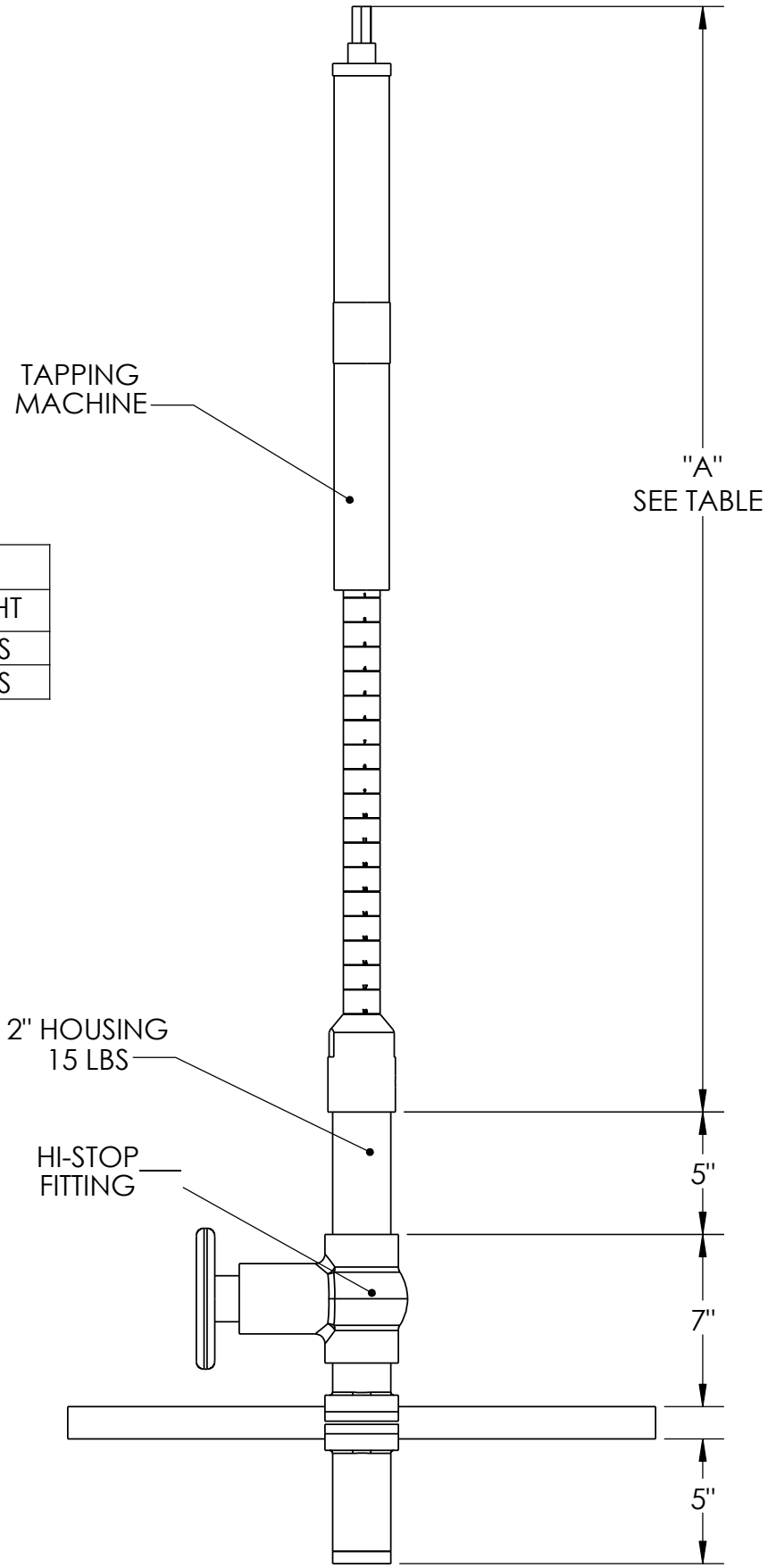


# 1" 600# HI-STOP®

**NOTE: EQUIPMENT AVAILABLILITY MUST BE VERIFIED BEFORE THE START OF THE JOB.**

**NOTE:**
**ALL WEIGHTS AND DIMENSIONS ARE BASED ON AVAILABLE DATA AND SUBJECT TO CHANGE.**

| "A" DIMENSIONS | | |
|---|---|---|
| TAP MACHINE | LENGTH | WEIGHT |
| 18" T-101 | 47" | 50 LBS |
| 28" T-101 | 57" | 60 LBS |

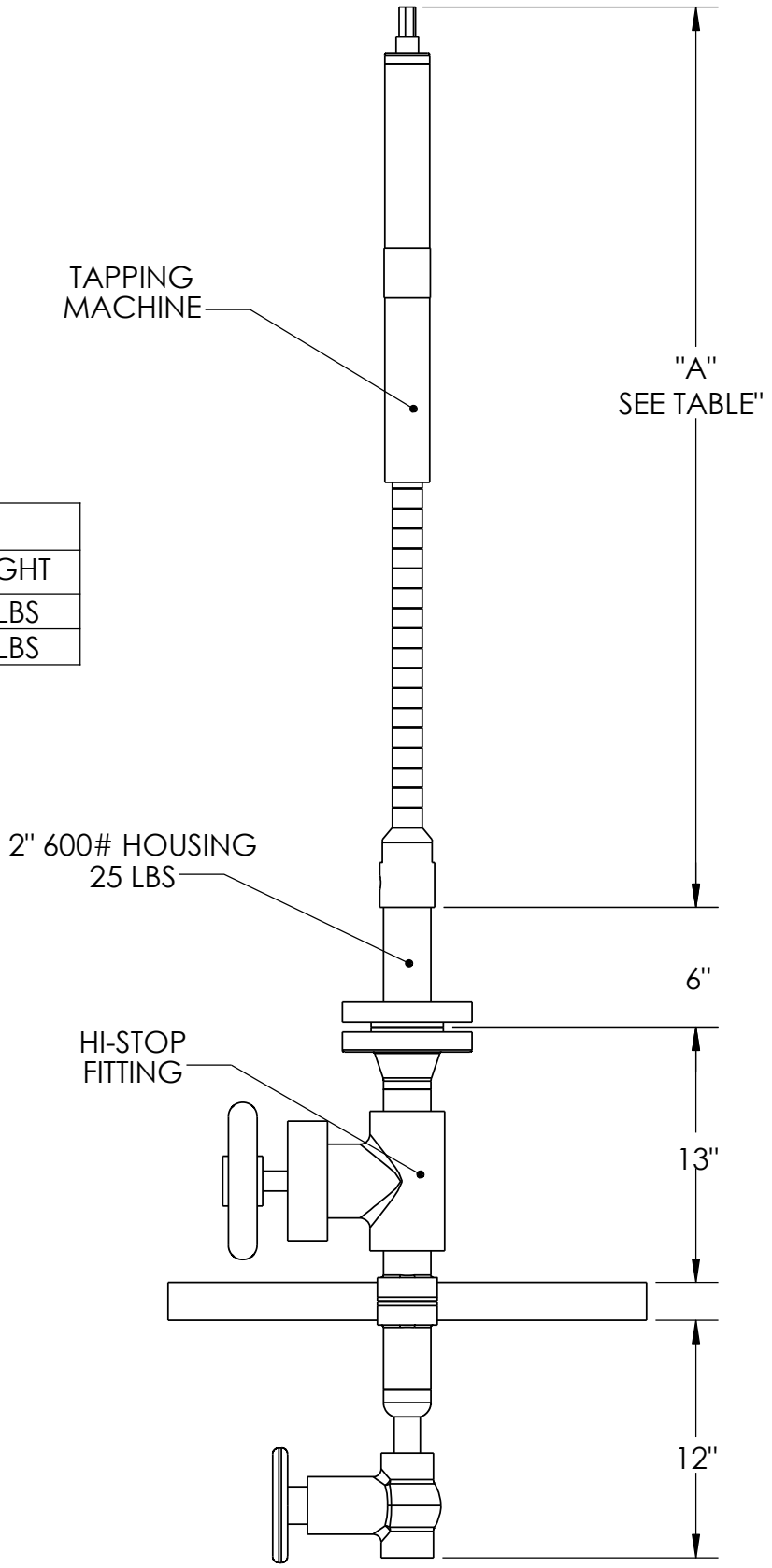


# 1.5" 600# HI-STOP®

SAFETY FIRST - QUALITY ALWAYS

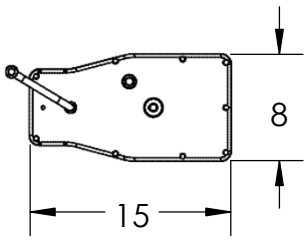


**NOTE: EQUIPMENT AVAILABLILITY MUST BE VERIFIED BEFORE THE START OF THE JOB.**

**NOTE:**
**ALL WEIGHTS AND DIMENSIONS ARE BASED ON AVAILABLE DATA AND SUBJECT TO CHANGE.**

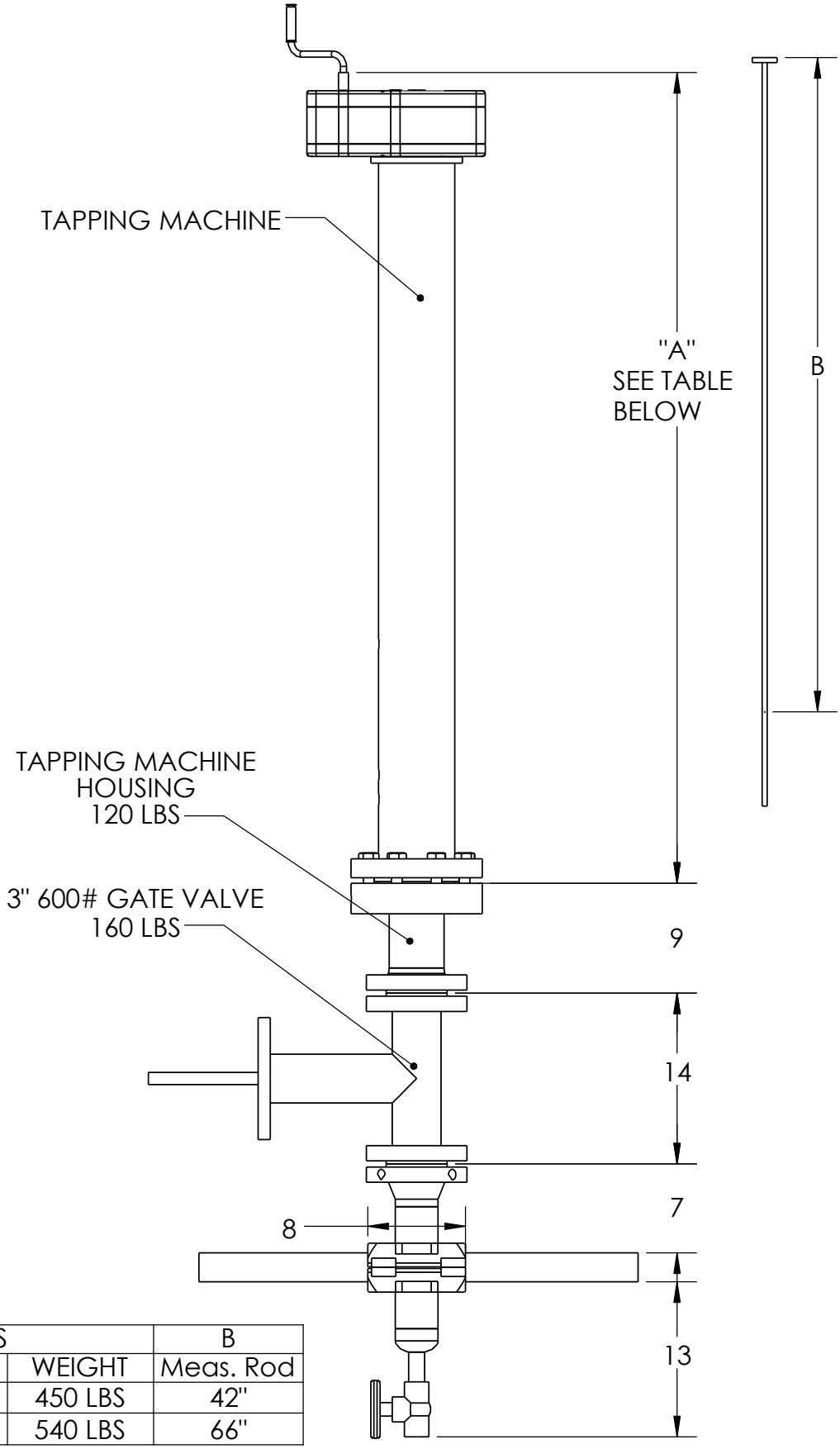


| "A" DIMENSIONS | | | B |
|---|---|---|---|
| TAP MACHINE | LENGTH | WEIGHT | Meas. Rod |
| 660TM | 65" | 450 LBS | 42" |
| 760TM | 89" | 540 LBS | 66" |

# 2" 600# HI-STOP®

SAFETY FIRST - QUALITY ALWAYS

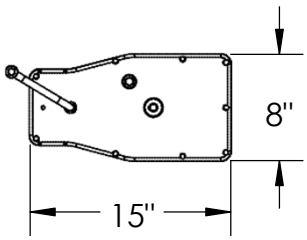


**NOTE: EQUIPMENT AVAILABLILITY MUST BE VERIFIED BEFORE THE START OF THE JOB.**

**NOTE:**
**ALL WEIGHTS AND DIMENSIONS ARE BASED ON AVAILABLE DATA AND SUBJECT TO CHANGE.**

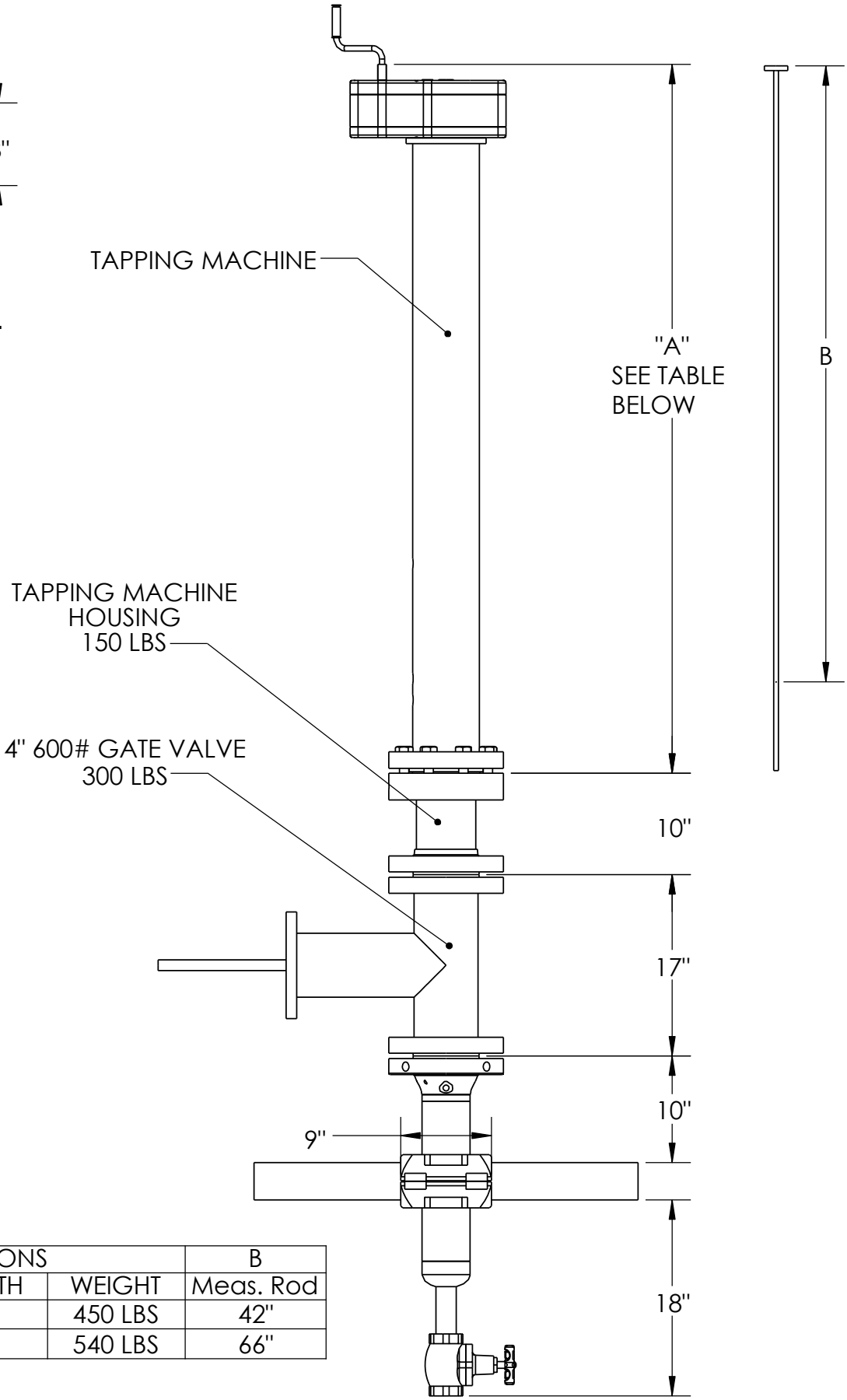


| "A" DIMENSIONS | | | B |
|---|---|---|---|
| TAP MACHINE | LENGTH | WEIGHT | Meas. Rod |
| 660TM | 65" | 450 LBS | 42" |
| 760TM | 89" | 540 LBS | 66" |

# 3" 600# HI-STOP®

SAFETY FIRST - QUALITY ALWAYS

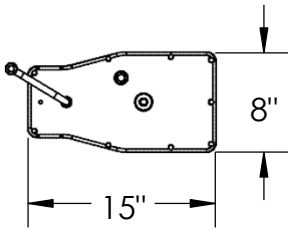


**NOTE: EQUIPMENT AVAILABLILITY MUST BE VERIFIED BEFORE THE START OF THE JOB.**

**NOTE:**
**ALL WEIGHTS AND DIMENSIONS ARE BASED ON AVAILABLE DATA AND SUBJECT TO CHANGE.**

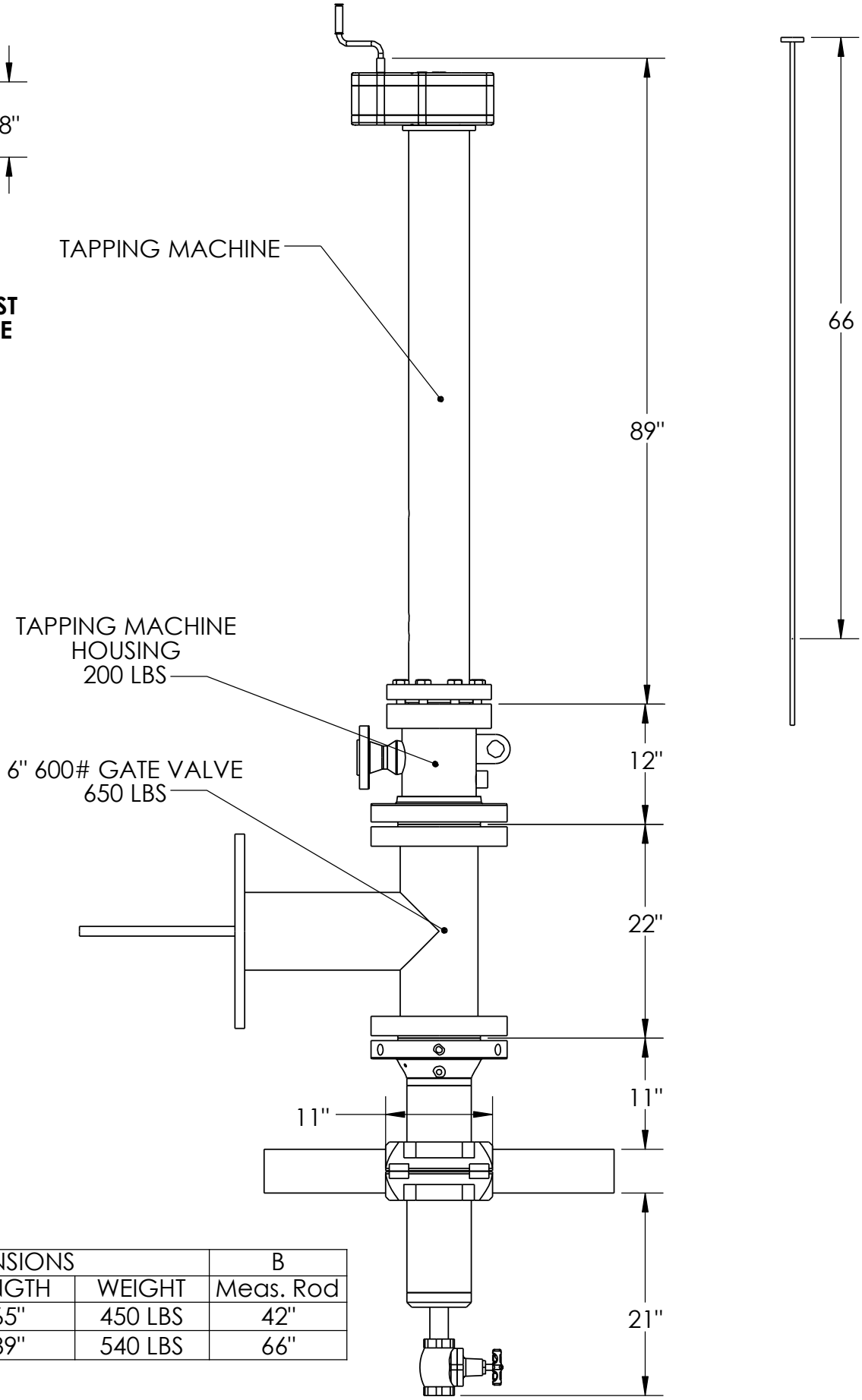


| "A" DIMENSIONS | | | B |
|---|---|---|---|
| TAP MACHINE | LENGTH | WEIGHT | Meas. Rod |
| 660TM | 65" | 450 LBS | 42" |
| 760TM | 89" | 540 LBS | 66" |

# 4" 600# HI-STOP®

SAFETY FIRST - QUALITY ALWAYS

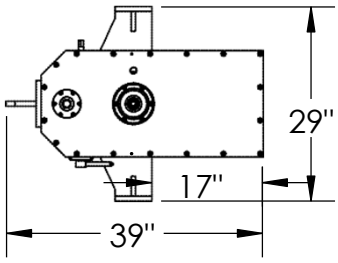


PLANETARY

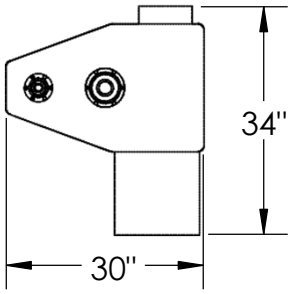


STANDARD

**NOTE: EQUIPMENT AVAILABLILITY MUST BE VERIFIED BEFORE THE START OF THE JOB.**

**NOTE:**
**ALL WEIGHTS AND DIMENSIONS ARE BASED ON AVAILABLE DATA AND SUBJECT TO CHANGE.**

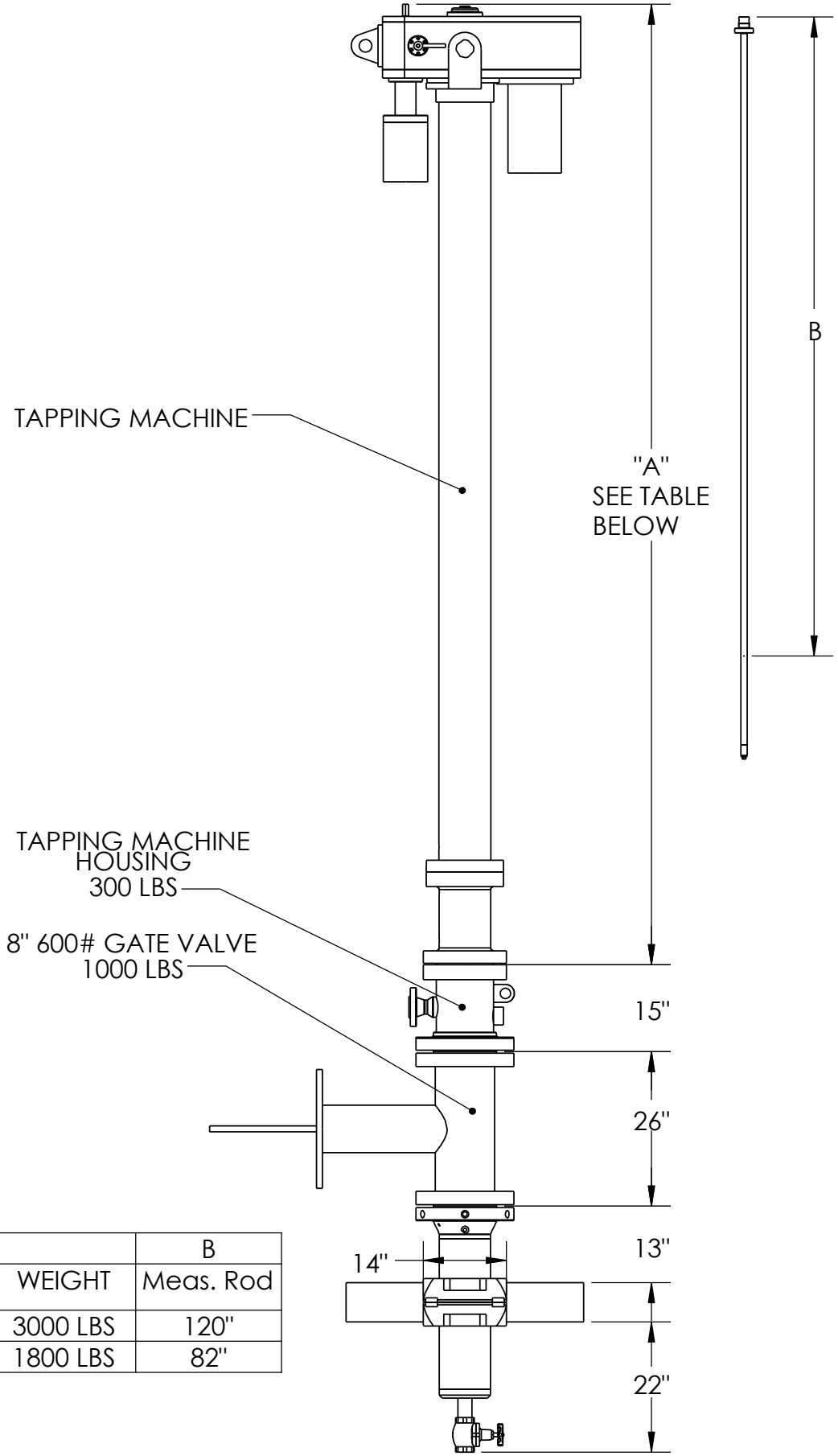


| "A" DIMENSIONS | | | B |
|---|---|---|---|
| TAP MACHINE | LENGTH | WEIGHT | Meas. Rod |
| M-120 | 162" | 3000 LBS | 120" |
| 1200/M-72 | 112" | 1800 LBS | 82" |

# 6" 600# HI-STOP®

SAFETY FIRST - QUALITY ALWAYS

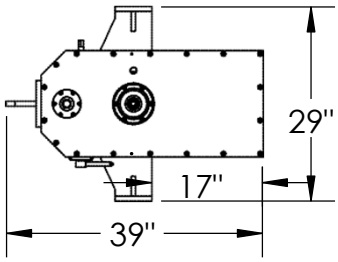


PLANETARY

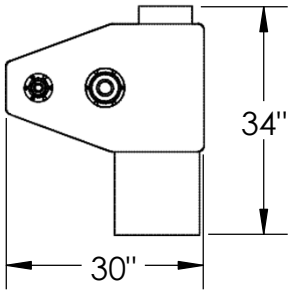


STANDARD

**NOTE: EQUIPMENT AVAILABLILITY MUST BE VERIFIED BEFORE THE START OF THE JOB.**

**NOTE:**
**ALL WEIGHTS AND DIMENSIONS ARE BASED ON AVAILABLE DATA AND SUBJECT TO CHANGE.**

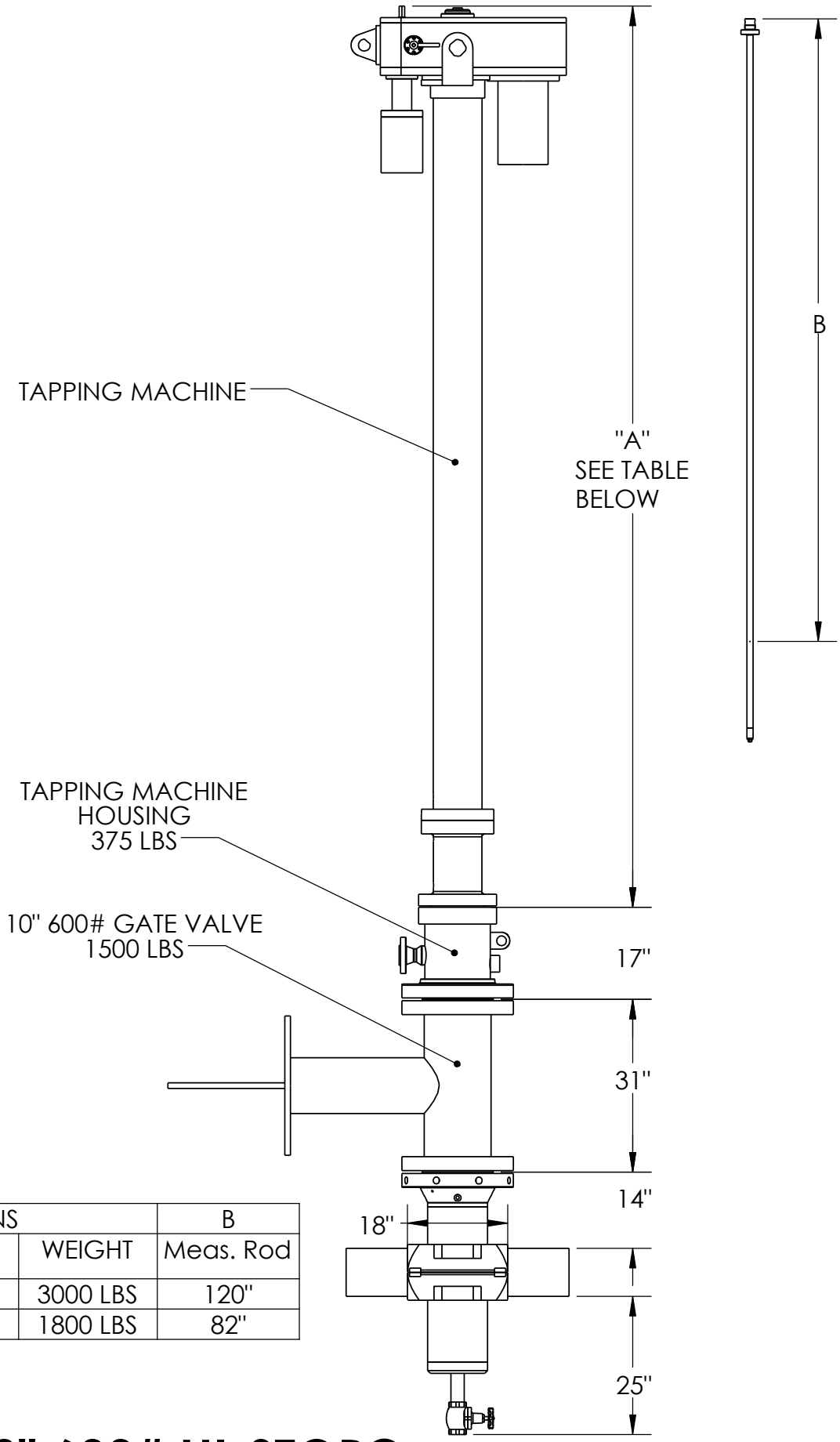


| "A" DIMENSIONS | | | B |
|---|---|---|---|
| TAP MACHINE | LENGTH | WEIGHT | Meas. Rod |
| M-120 | 162" | 3000 LBS | 120" |
| 1200/M-72 | 112" | 1800 LBS | 82" |

# 8" 600# HI-STOP®

SAFETY FIRST - QUALITY ALWAYS

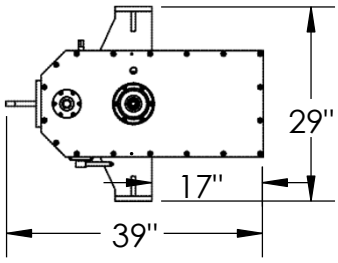


PLANETARY

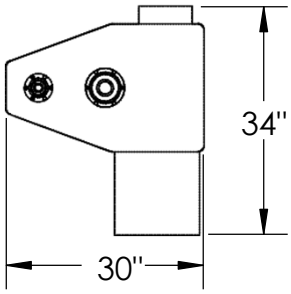


STANDARD

**NOTE: EQUIPMENT AVAILABLILITY MUST BE VERIFIED BEFORE THE START OF THE JOB.**

**NOTE:**
**ALL WEIGHTS AND DIMENSIONS ARE BASED ON AVAILABLE DATA AND SUBJECT TO CHANGE.**

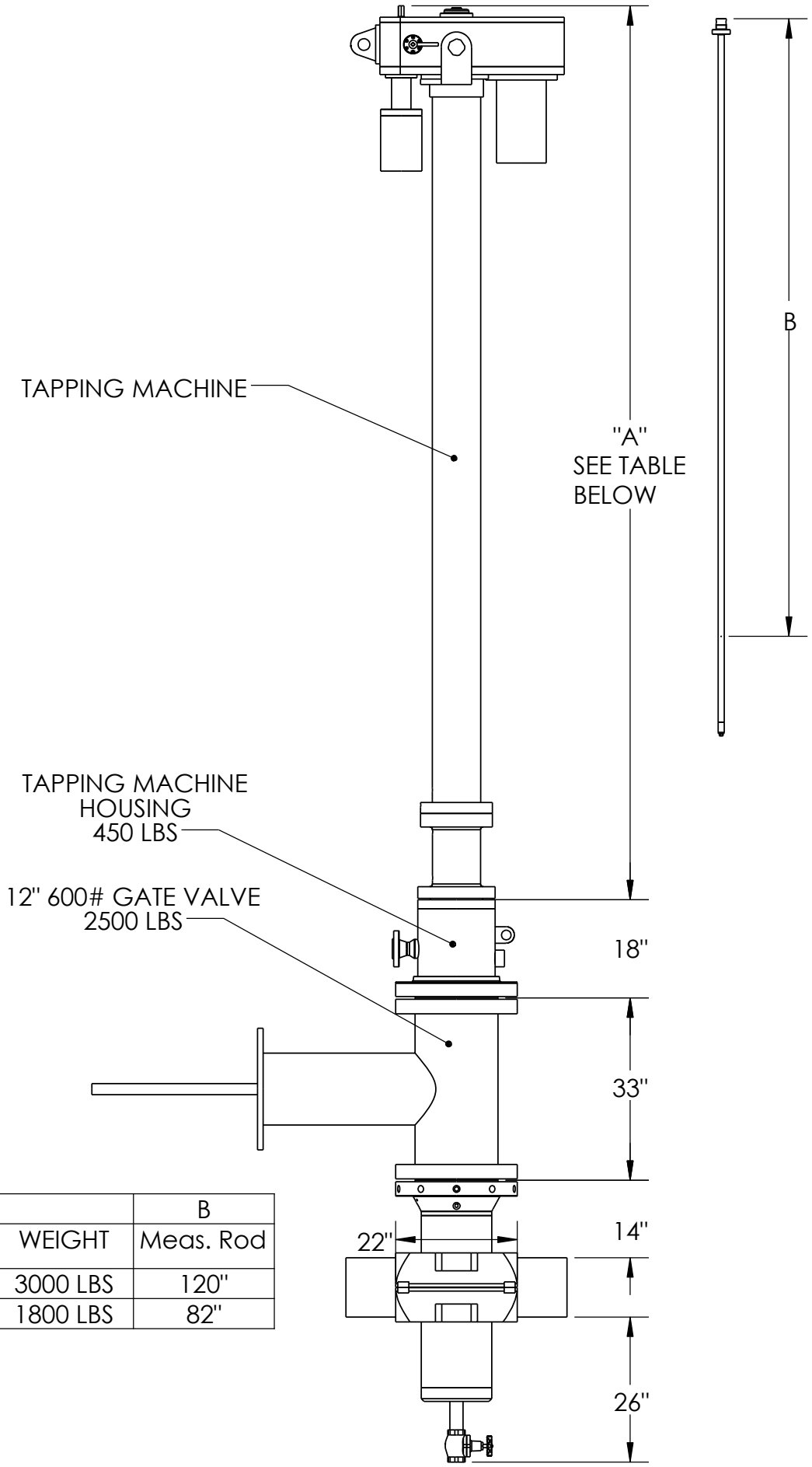


| "A" DIMENSIONS | | | B |
|---|---|---|---|
| TAP MACHINE | LENGTH | WEIGHT | Meas. Rod |
| M-120 | 162" | 3000 LBS | 120" |
| 1200/M-72 | 112" | 1800 LBS | 82" |

# 10" 600# HI-STOP®

SAFETY FIRST - QUALITY ALWAYS

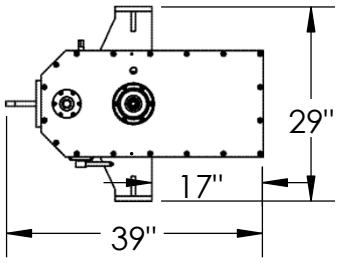


PLANETARY

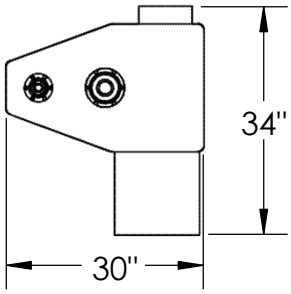


STANDARD

**NOTE: EQUIPMENT AVAILABLILITY MUST BE VERIFIED BEFORE THE START OF THE JOB.**

**NOTE:**
**ALL WEIGHTS AND DIMENSIONS ARE BASED ON AVAILABLE DATA AND SUBJECT TO CHANGE.**

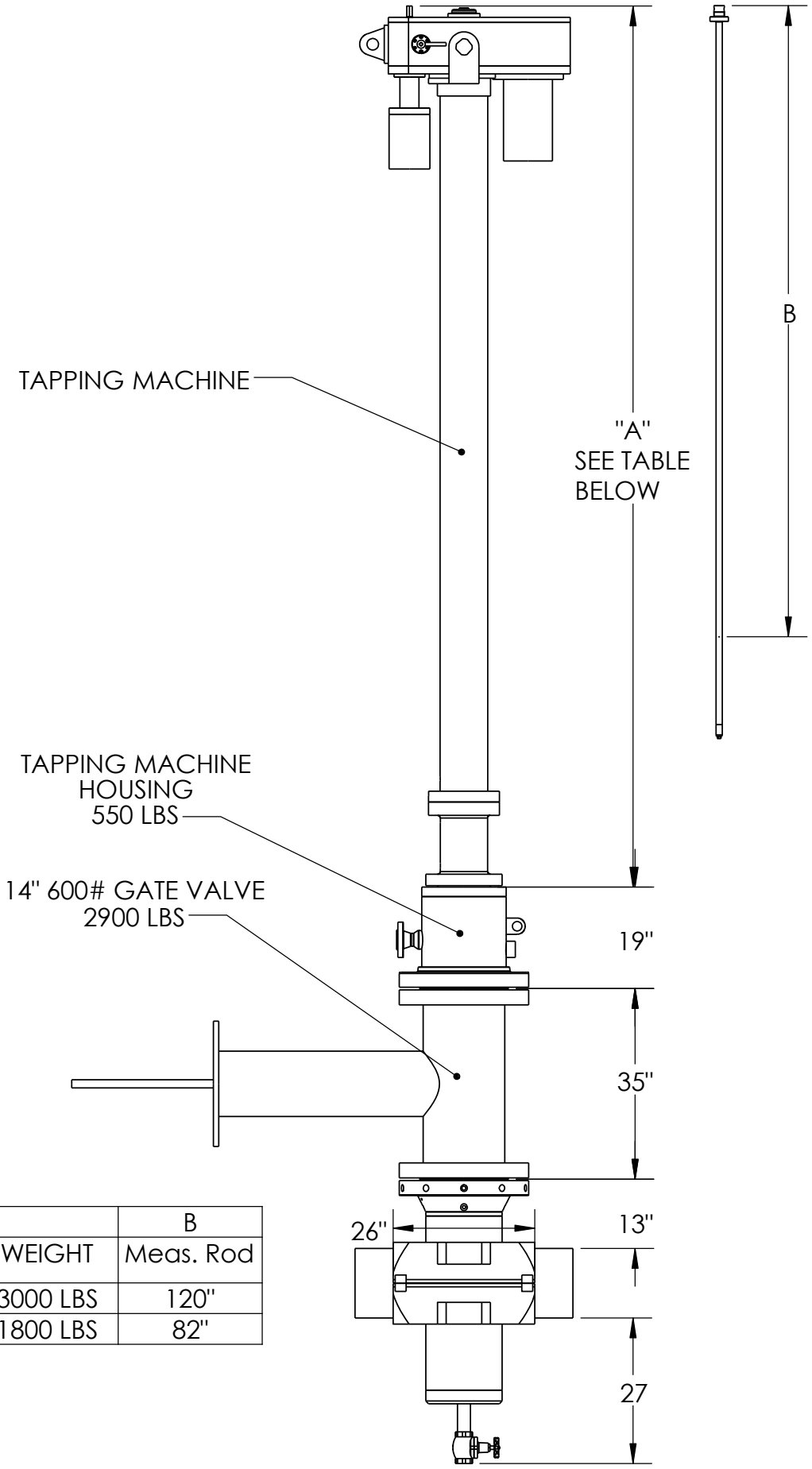


| "A" DIMENSIONS | | | B |
|---|---|---|---|
| TAP MACHINE | LENGTH | WEIGHT | Meas. Rod |
| M-120 | 162" | 3000 LBS | 120" |
| 1200/M-72 | 112" | 1800 LBS | 82" |

# 12" 600# HI-STOP®

SAFETY FIRST - QUALITY ALWAYS

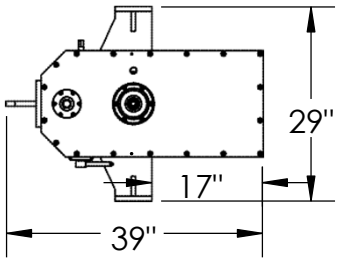


PLANETARY

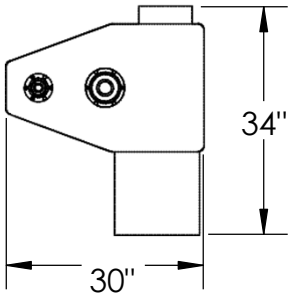


STANDARD

**NOTE: EQUIPMENT AVAILABLILITY MUST BE VERIFIED BEFORE THE START OF THE JOB.**

**NOTE:**
**ALL WEIGHTS AND DIMENSIONS ARE BASED ON AVAILABLE DATA AND SUBJECT TO CHANGE.**

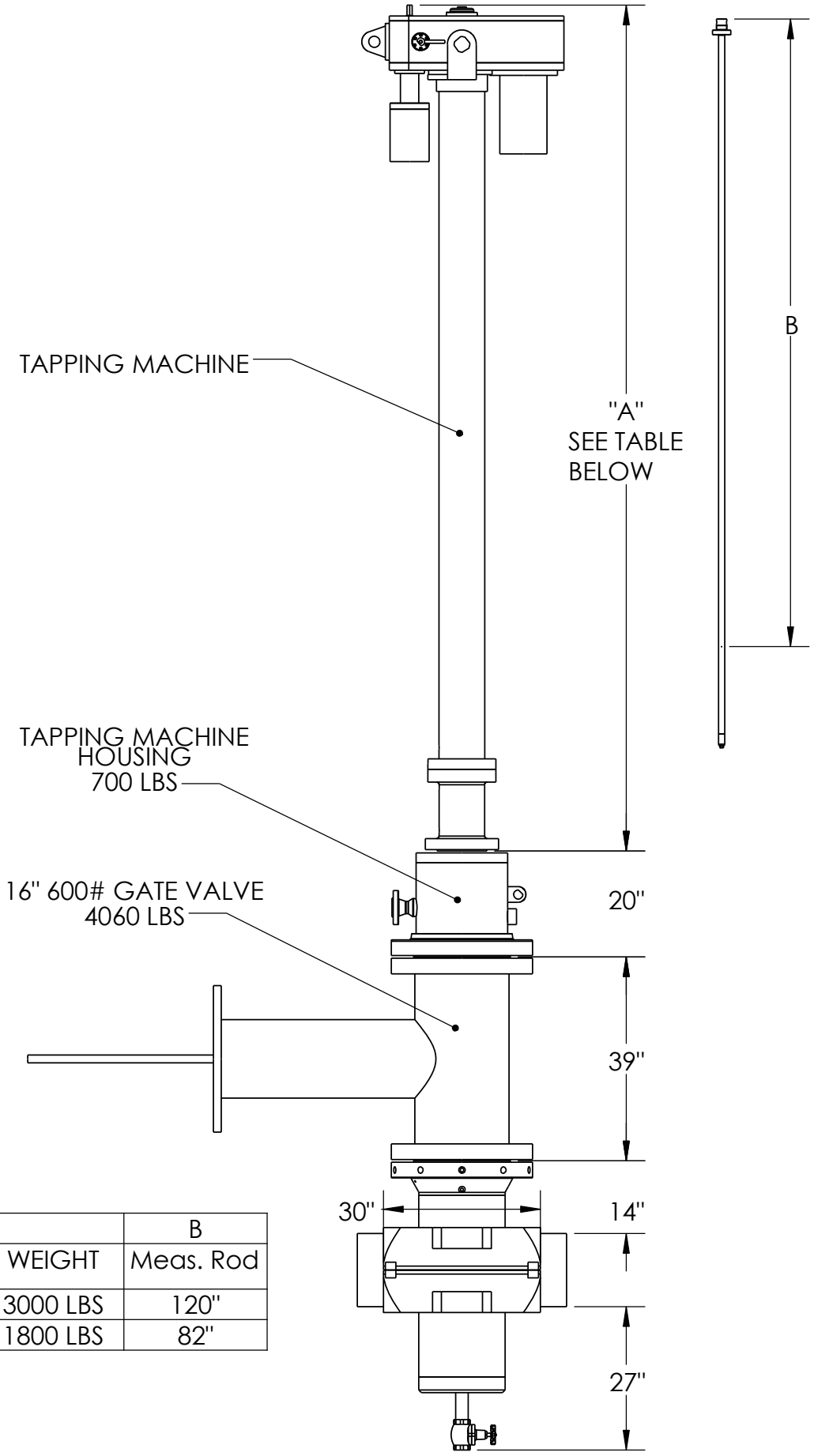


| "A" DIMENSIONS | | | B |
|---|---|---|---|
| TAP MACHINE | LENGTH | WEIGHT | Meas. Rod |
| M-120 | 162" | 3000 LBS | 120" |
| 1200/M-72 | 112" | 1800 LBS | 82" |

# 14" 600# HI-STOP®

SAFETY FIRST - QUALITY ALWAYS

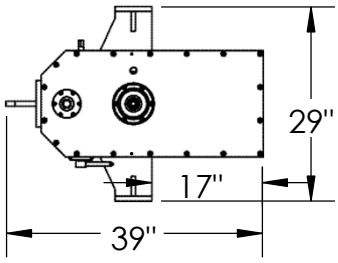


PLANETARY

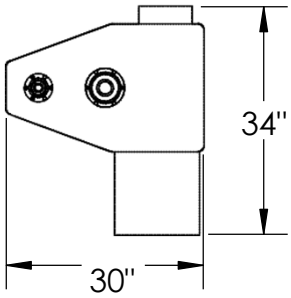


STANDARD

**NOTE: EQUIPMENT AVAILABLILITY MUST BE VERIFIED BEFORE THE START OF THE JOB.**

**NOTE:**
**ALL WEIGHTS AND DIMENSIONS ARE BASED ON AVAILABLE DATA AND SUBJECT TO CHANGE.**

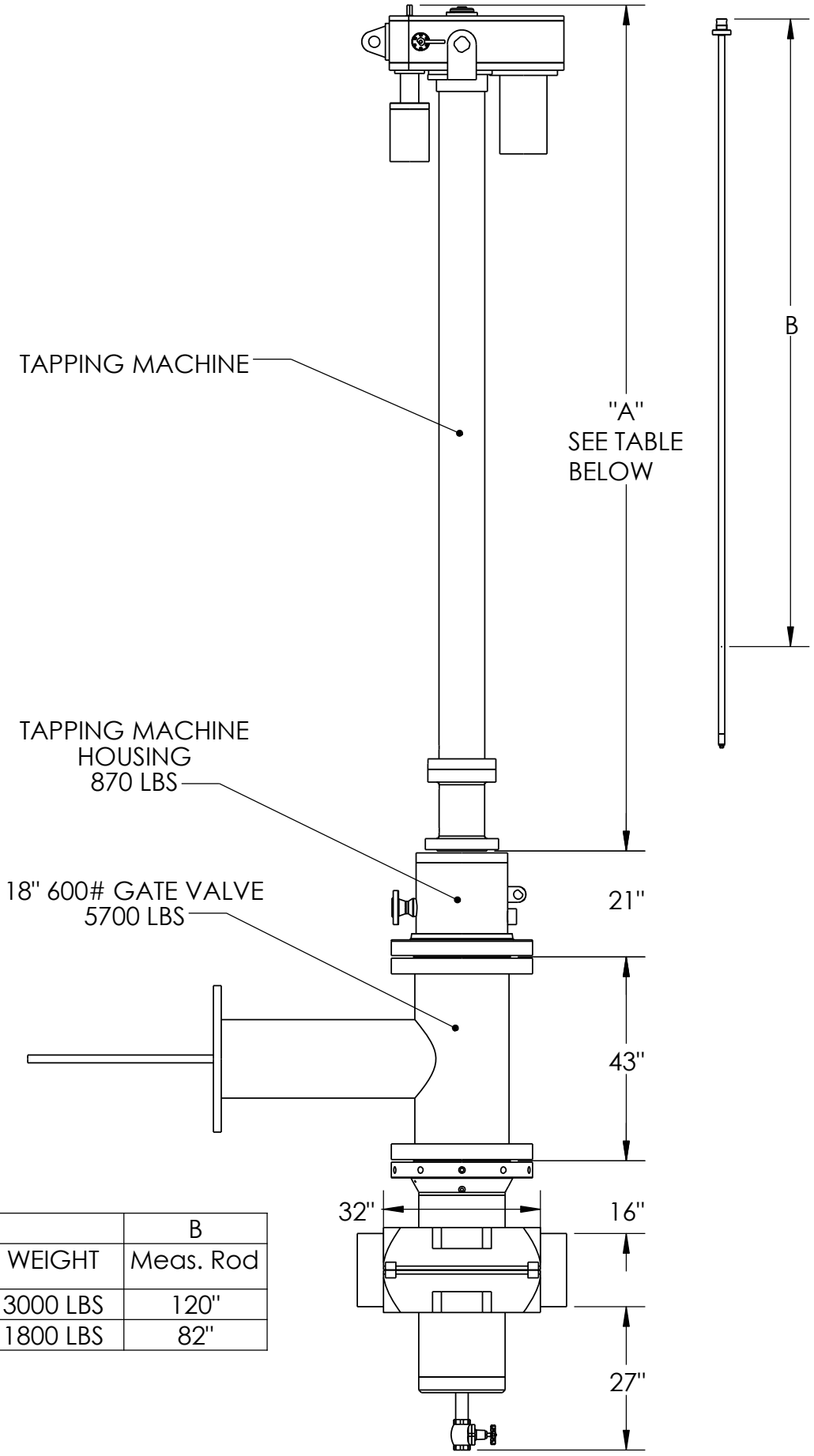


| "A" DIMENSIONS | | | B |
|---|---|---|---|
| TAP MACHINE | LENGTH | WEIGHT | Meas. Rod |
| M-120 | 162" | 3000 LBS | 120" |
| 1200/M-72 | 112" | 1800 LBS | 82" |

# 16" 600# HI-STOP®